Internal Options:

- CPU EM64T — 311584-B21 — 2nd CPU EM64T 3600MHz 1MB
- 1GB — 343055-B21
- 2GB — 343056-B21
- 4GB — 343057-B21
- 355892-B21 — 355892-B21 — G4 2nd power
- 293048-B21 — 2nd Fan kit

346914-B21 6i BBWC
BB for RAID WC

- 286776 36GB 1.0" — 286776-B22 — 36GB 15k U320
- 286778 72GB 1.0" — 286778-B22 — 72GB 15k U320
- 286716 146GB 1.0" — 286716-B22 — 146GB 10k U320
- 350964 300GB 1.0" — 350964-B22 — 300GB 10k U320
- Q1529A DAT 72 — Q1529A — DAT 72 drive
- 364507-B21 — RX drive
- 290563-B21 — 290563-B21 — NC7771 OnePort PCI-X Gigabit
- 313881-B21 — 313881-B21 — NC7170 DualPort PCI-X Gigabit
- 273915-B21 — 273915-B21 — Smart Array 6402/128 2-Ch
- 281541-B21 — 281541-B21 — FibreChannel HBA 2Gb/s FCA2214
- 257894-006 — 257894-006 — Myrinet XP-Fibre M3F-PCIXD-2

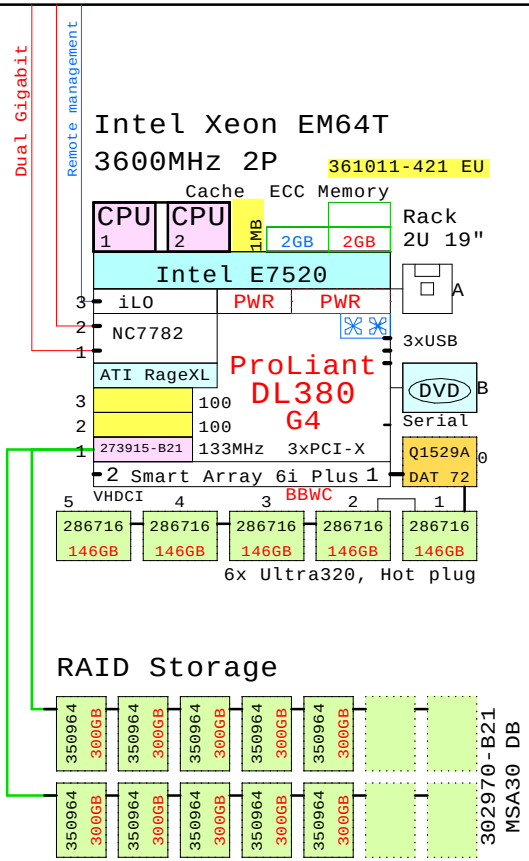

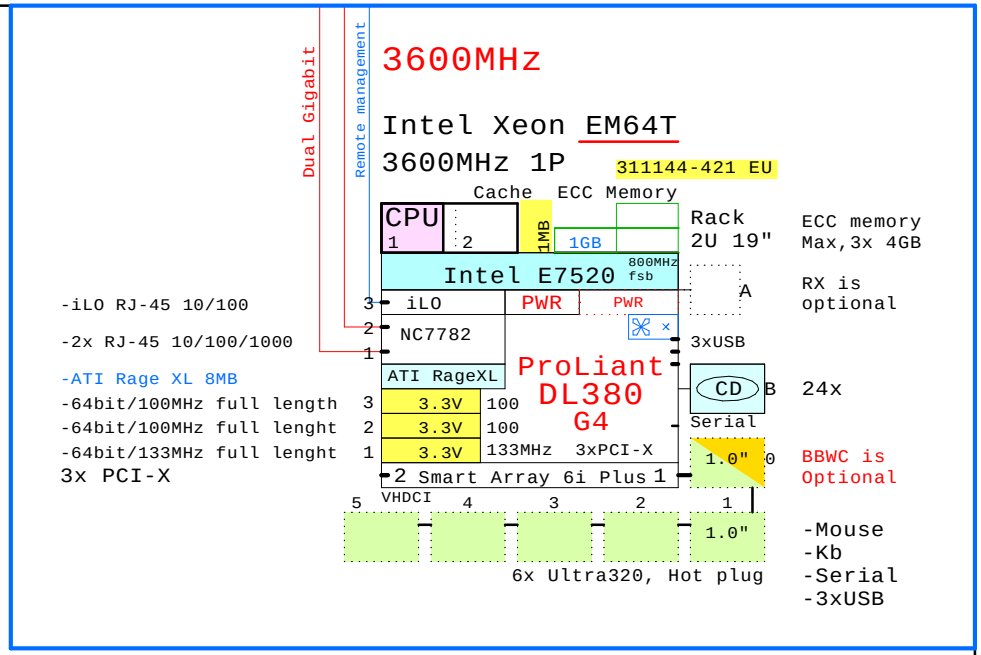

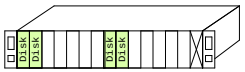

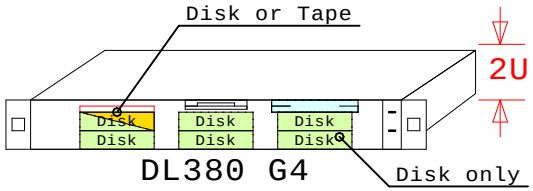

MS Windows Server 2000
MS Windows Server 2003
Novell NetWare
LINUX: Red Hat, SuSE
SCO UnixWare, OpenServer

For Golden Eggs:
http://www.LinuxHPC.org

When this diagram has influenced on your purchase decision,please let us know.
Matti.Patari@Kolumbus.fi GE-Architect.

BOM of the 3600MHz 1MB 2GB 2P 2xPwr BBWC system above

	Part Number	Qty	Description
1	361011-421	1	DL380 G4 2P 3600MHz-1MB 2GB EM64T 2U
1.1	273915-B21	1	Smart Array 6402/128 Ultra320 2-chan
1.2	286716-B22	5	146.8GB 10000r U320 disk 1"
1.3	343056-B21	1	2GB PC2 PC3200 DDR2 SDRAM kit(2x1GB)
1.4	Q1529A	1	HP DAT 72 Tape Drive Hot-Plug
2	302970-B21	1	MSA30 Dual Buss Ultra320 7+7 1"
2.1	350964-B22	10	300GB 10000r U320 disk 1"

For more detailed configuring, please consult the latest HP QuickSpecs.
Generated with fresh GOLDEN EGGS Software, Rev:30-Nov-2004

DL380 G4 2P

GOLDEN EGGS Visuals Helsinki	31-Jan-2005	GEIDL380G4a
	Matti.Patari@Kolumbus.fi	

ProLiant DL380 G4 EM64T 3600MHz
GOLDEN EGGS Visuals, Helsinki

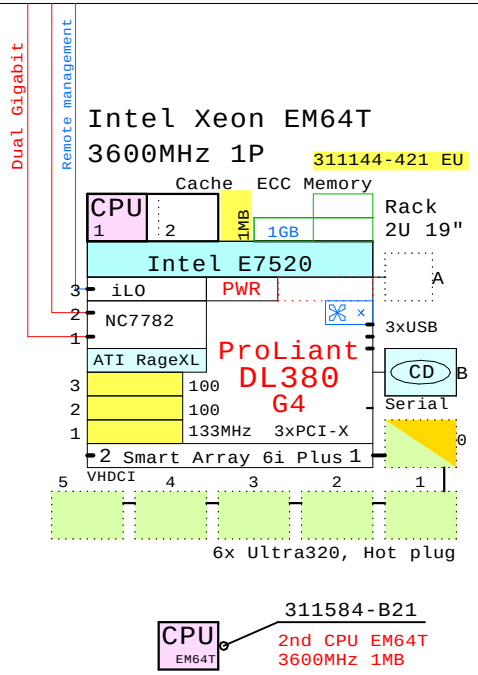

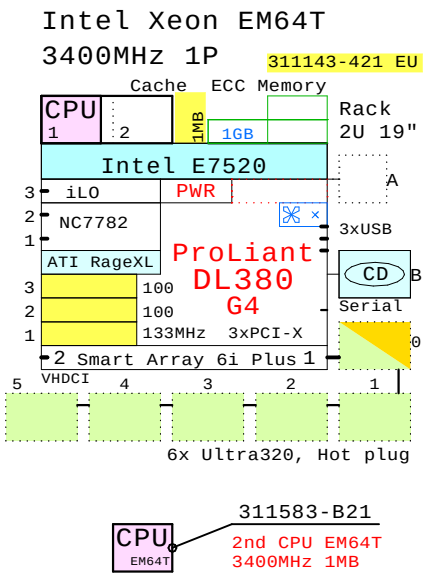

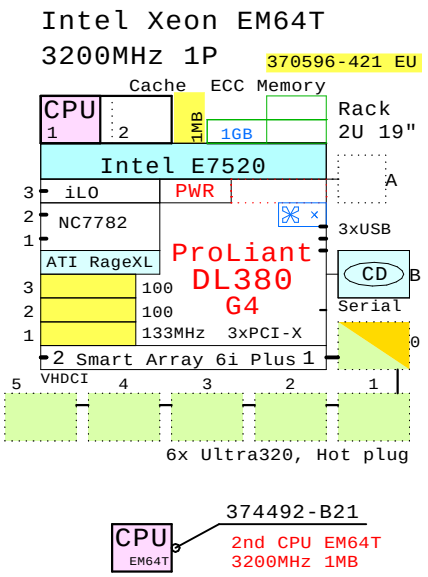

High Performance with redundamcy

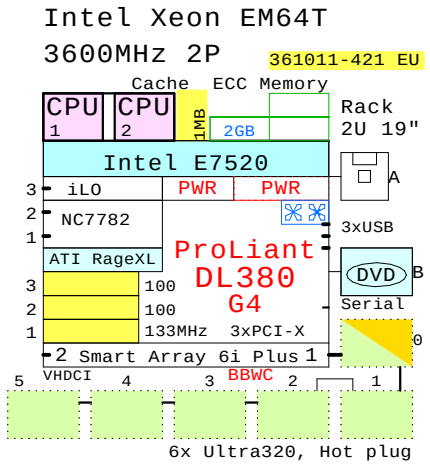

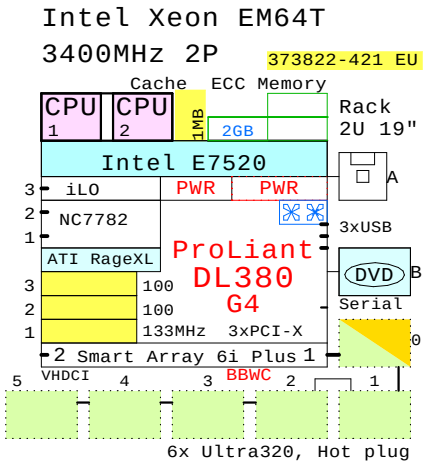

	Part Number	Qty	Description
1	311583-B21	1	Intel Xeon 3400MHz 1MB EM64T proc. kit
2	311584-B21	1	Intel Xeon 3600MHz 1MB EM64T proc. kit
3	374492-B21	1	Intel Xeon 3200MHz 1MB EM64T proc. kit
4	343055-B21	1	1GB PC2 PC3200 DDR2 SDRAM kit(2x512MB)
5	343056-B21	1	2GB PC2 PC3200 DDR2 SDRAM kit(2x1GB)
6	343057-B21	1	4GB PC2 PC3200 DDR2 SDRAM kit(2x2GB)

	Part Number	Qty	Description
1	311143-421	1	DL380 G4 1P 3400MHz-1MB 1GB EM64T 2U
2	311144-421	1	DL380 G4 1P 3600MHz-1MB 1GB EM64T 2U
3	361011-421	1	DL380 G4 2P 3600MHz-1MB 2GB EM64T 2U
4	370596-421	1	DL380 G4 1P 3200MHz-1MB 1GB EM64T 2U
5	373822-421	1	DL380 G4 2P 3400MHz-1MB 2GB EM64T 2U

For Golden Eggs:
http://www.LinuxHPC.org

When this diagram has influenced on your purchase decision,please let us know.
Matti.Patari@Kolumbus.fi GE-Architect.

For more detailed configuring, please consult the latest HP QuickSpecs.
Generated with fresh GOLDEN EGGS Software, Rev:30-Nov-2004

DL380 G4 2P

GOLDEN EGGS Visuals Helsinki	31-Jan-2005	GEIDL380G4a-2
	Matti.Patari@Kolumbus.fi	

DL380 G4 EM64T Base Systems
GOLDEN EGGS Visuals, Helsinki